ENGINE, MOUNTING & LONG BLOCK - Z26SPD92AN/AH/BN/BH (C750277)

RZR - RZR PRO S ULTIMATE (R01) - Z26SPD92AN/AH/BN/BH

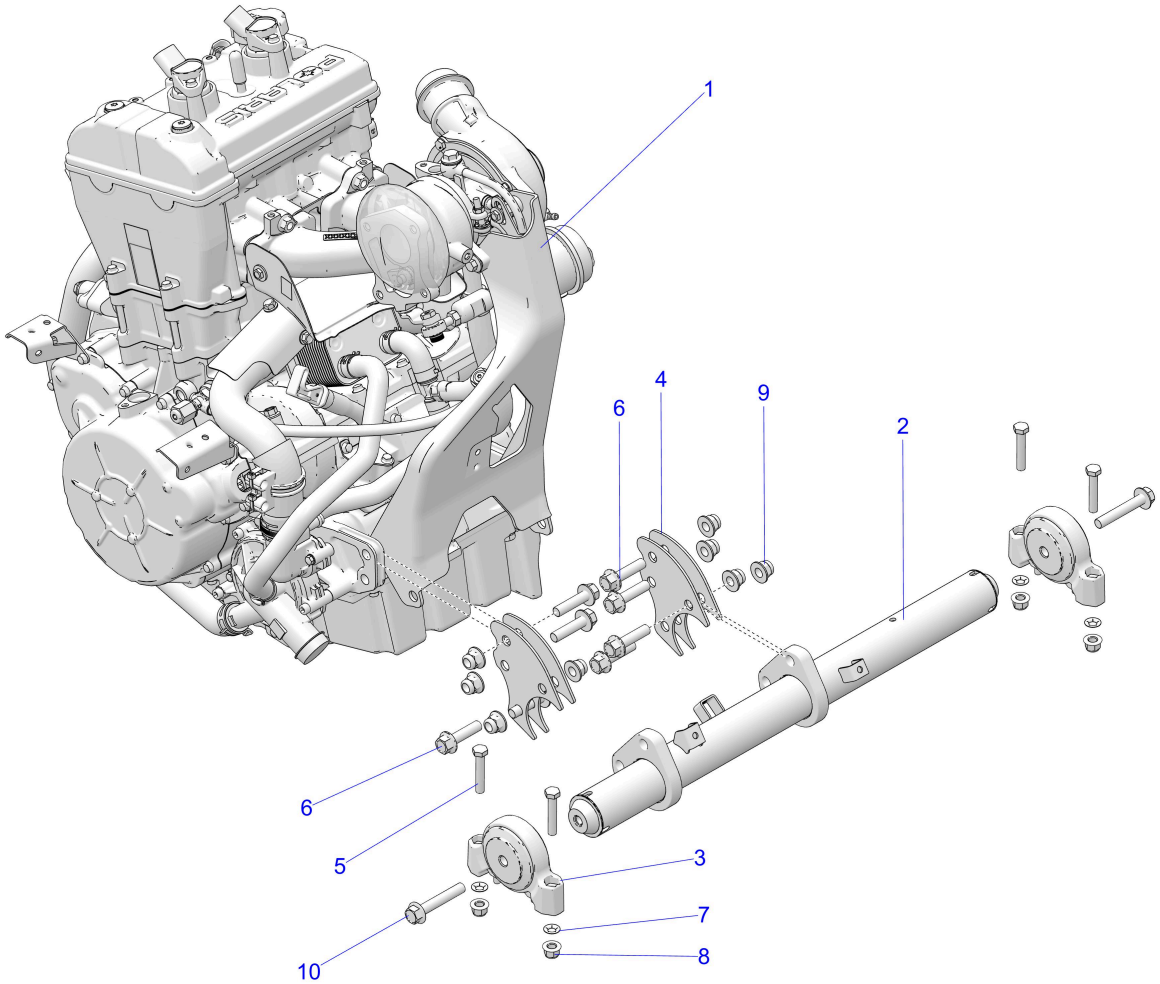

© 2023 Polaris Industries Inc.

C750277

Reference #	*Part#*	*Description*	*Quantity*
1	2208360	ENGINE, LONG BLOCK	1
2	1025640-329	WELD-MOUNT,ENGINE,ECOAT	1
3	1333242	MOUNT-ISOLATOR,70 DURO	2
4	5257952	BRACKET, MOUNT, ENGINE	4
5	7519097	SCREW-HH M8X1.25X45 8.8 ZOD	4
6	7519332	SCR-HXFL-M10X1.25X40 8.8 ZOD	8
7	7547030	NUT-5/16-PAL-Y	4
8	7547332	NUT- M8X1.25, FLG, NYLOC-OLIVE D	4
9	7547333	NUT-HXFL M10X1.25 8 ZTB NYL	8
10	7520355	SCR-HXFL-M10X1.5X60 10.9 ZOD	2

Copyright 1996-2026 Polaris Industries U.S.A All rights reserved.